AgOtter

Installation Manual

3928 S. Dorsey Lane
Tempe, AZ 85282
+1 (602) 363-9225

AgOtter is a spray rate controller which uses GPS, inertial sensors and wheel sensors to measure, record and / or control the spray rate for commercial orchard sprayers in full or partial canopy. If the one of the many sensors for the AgOtter, i.e. wheel sensor, flow meters, GPS receiver or inertial sensor, are NOT installed correctly or NOT calibrated correctly the AgOtter system may NOT work and could be inaccurate.

1. Table of Contents

2. Warnings

A) **Manual** - Read this entire manual before installing the AgOtter System. If you require additional help with installing the AgOtter system contact support, via gregguyette@inserosolutions.com or +1 (602)-363-9225.

B) **Pressure Relief Valve** - When installing the AgOtter system, identify the relief valve in the spraying system. Make sure that when the plumbing installation is complete that the relief valve is never bypassed or isolated with the AgOtter system. The purpose of the relief valve is to protect the pump and system components from excessive pressure due to something going wrong, like the AgOtter control valve fully closing. Excessive pressure will permanently damage the pump or system components and is a very dangerous situation as parts can explode.

C) **System Pressure**
   a) **Proper Plumbing** -
      i) Orchard sprayer can have system pressures between 35 psi to 350 psi. An installer of an AgOtter system should verify system pressure and make sure any plumbing and fitting added to the sprayer are certified to handle the system pressure.
      ii) When installing an AgOtter system, if any additional plumbing is needed make sure to use the same diameter plumbing parts. In other words, if the existing plumbing uses 1 inch diameter pipe, use 1 inch diameter pipe, not 0.75 or 1.5 inch diameter piping. Using a different diameter pipe or components can cause pressure drop problems with the system.
   b) **Leaks** - Leaks in the plumbing of the sprayer can be dangerous and no attempt should be made to plug the leak until the sprayer's pump is completely off and pressure on the system is at atmospheric pressure. In other words, zero psi.
   c) **System Pressure** - Never attempt to open the system (i.e. replace or loosen a component) while it is running or is pressurized as someone will get hurt from the pressurized liquid.

D) **Safety Glasses** - During installation of an AgOtter system, the installers need to wear properly rated safety glasses at all times.

E) **Chemicals** - Sprayers, like orchard sprayers, spray potentially dangerous chemicals. There may be a residual of these chemicals on the sprayer. Before installing an AgOtter system, the sprayer needs to be washed off with a high pressure washer. If there are any questions regarding the chemicals used in the sprayer contact the sprayer owner and his chemical supplier for chemical label information. AgOtter installers must follow chemical label information when dealing with any chemicals.

F) **Calibration** - If the AgOtter system is not calibrated, measured flow and sprayer output flow WILL not be accurate. The flow meter and wheel speed sensor need to be calibrated. The calibration formula is:

$$New\ Calibration\ Number = \frac{Perceived Value}{Actual Value}\ X\ Original\ Calibration\#$$

Some Examples:

a) If the flow meter calibration is low by 10%:
   i) AgOtter system says 9 gallons used but 10 gallons were actually used.
   ii) This means that 10% more acres could have been covered. So instead of covering say 50 acres in 1 tank fill, only 45 acres will be completed.

$$New\ Calibration\ Number = \frac{9\ Gallons\ Used}{10\ Gallons\ Actually\ Used}\ X\ Original\ Calibration\#$$

b) If the flow meter calibration is high by 10%:
   i) AgOtter system says 20 gallons used but 18 gallons were actually used.
   ii) This means the applied rate will be less so the effectiveness of the spray will be less.

$$New\ Calibration\ Number = \frac{20\ Gallons\ Used}{18\ Gallons\ Actually\ Used}\ X\ Original\ Calibration\#$$

c) The calibration number should be continually monitored, especially for the first few days of use each season. For instance, if 500 gallons were sprayed out but the AgOtter System says that 400 gallons were sprayed out, the meter cal should be adjusted by the following:

$$New\ Calibration\ Number = \frac{500\ Gallons\ Used}{400\ Gallons\ Actually\ Used}\ X\ Original\ Calibration\#$$

3. Units Definitions and Conversions

3.1. Units of Measure Definitions

gpm = Gallons per Minute lit / min = Liters per Minute lit / ha = Liters per Hectare gpa = Gallons per Acre psi = Pounds per Square Inch kPa = KiloPascal	mm = Millimeters cm = Centimeters m = Meters km = Kilometers mph = Miles per Hour kph = Kilometers per Hour kg = kilogram lbs = pound

3.2. Units of Measure Conversions

Pressure 1 psi = 6.89 kPa 1 kPa = 0.145 psi 1 bar = 14.5038 psi 1 bar = 100 kPa ***Liquid*** 1 US gallon = 128 fluid ounces 1 US gallon = 0.83267 imperial gallons 1 US gallon water = 8.34 pounds of water 1 US gallon = 3.785 liters 1 liter = 0.2642 US gallon 1 liter water = 2.2034 pounds of water 1 liter water = 1.0 kilogram	***Area*** 1 square meter = 10.764 square feet 1 hectare = 10,000 square meters 1 hectare = 2.471 acres 1 square foot = 0.0929 square meter 1 acre = 0.405 hectares 1 acre = 43,560 square feet 1 square mile = 640 acres ***Length*** 1 inch = 25.4 mm = 2.54 cm 1 foot = 12 inches = 0.3048 m = 30.48 cm 1 mile = 5280 feet = 1.609 km = 1609 m 1 cm = 10 mm = 0.3937 inches 1 m = 100 cm = 3.281 feet = 39.37 inches 1 km = 1000 m = 0.6215 miles = 3282 feet

3.3 Flow Rate Conversions

$$\frac{Gallon}{Minute}\,(GPM) = \frac{\frac{Gallons}{Acre}\,X\,Speed\,(mph)\,X\,Swath\,Width(feet)}{495}$$

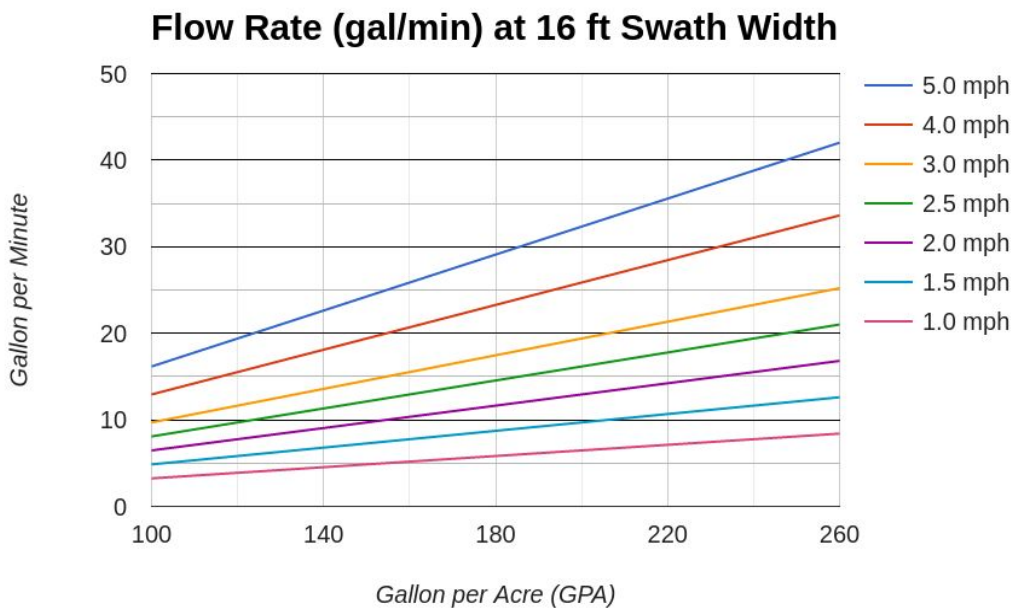

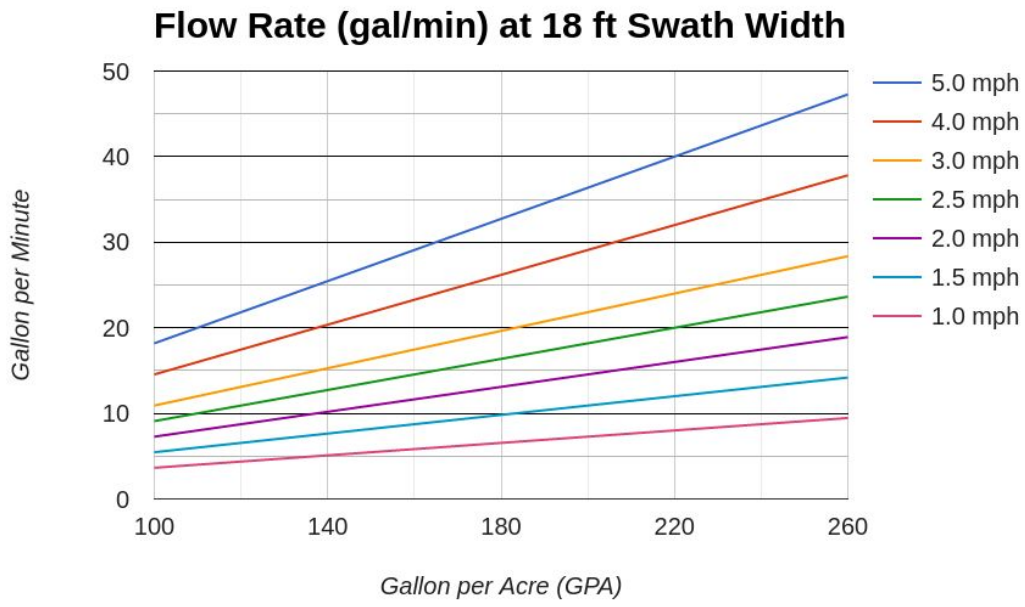
Flow Rate (gal/min) at 18 ft Swath Width
Gallon per Minute
Gallon per Acre (GPA)
0
10
20
30
40
50
100
140
180
220
260
5.0 mph
4.0 mph
3.0 mph
2.5 mph
2.0 mph
1.5 mph
1.0 mph

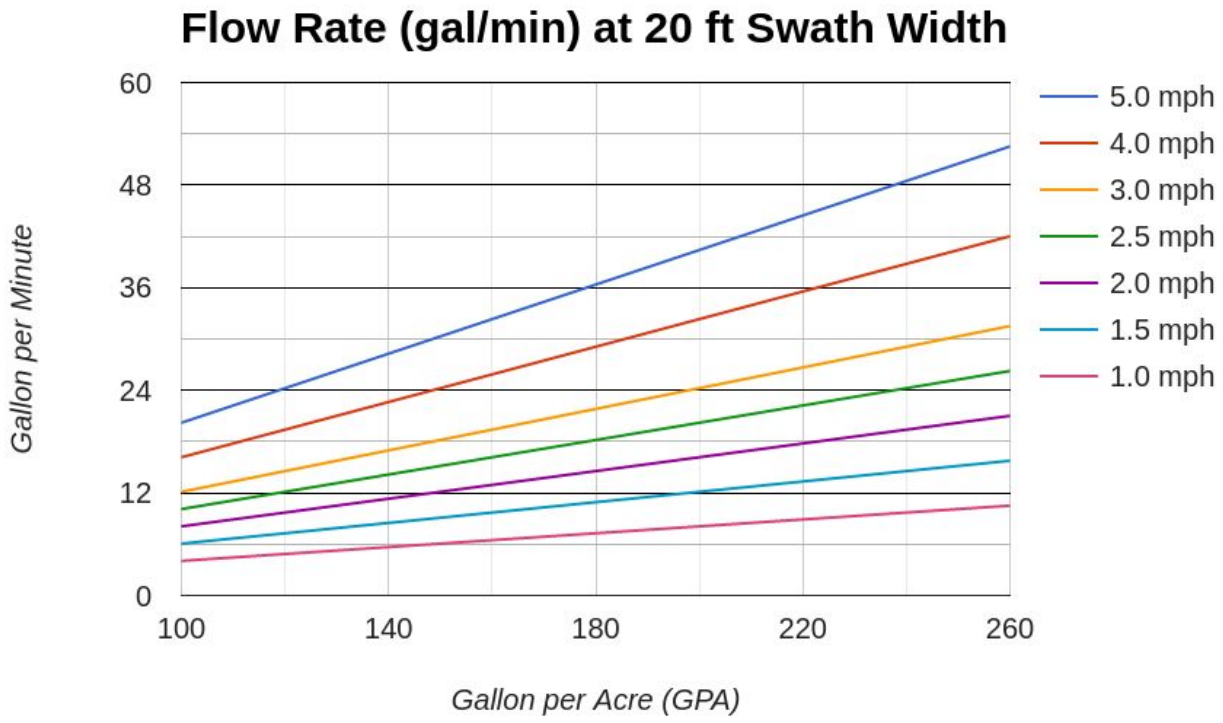
Flow Rate (gal/min) at 20 ft Swath Width
60
48
36
24
12
0
100
140
180
220
260
Gallon per Minute
Gallon per Acre (GPA)
5.0 mph
4.0 mph
3.0 mph
2.5 mph
2.0 mph
1.5 mph
1.0 mph

4. AgOtter System Options & Kit Parts

A) Log sprayer location only - Order Kit #1

Part Number	Part Description	Kit 1
ADPT-0001	12V Vehicle to USB Adapter, AgOtter	1
ASSY-0002	AgOtter2 Controller	1
CABL-0006	GPS Antenna Cable - 6 feet	1
CABL-0010	Cable, Battery, PTO (96”)	1
	OR	
CABL-0021	Cable, Battery, ED (9”)	1

CABL-0014	Cable, Wheel	1
CABL-0015	Wheel Sensor (Mag Pickup Sensor)	1
CABL-0031	Cable, AgOtter2 Main Cable	1
BRKT-0001	AgOtter Mounting Bracket w/hardware	1
GANT-0002	GPS Antenna	1
HDWR-0012	Cable tie, Black, 14.5”	10
HDWR-0013	Cable tie, Black, 7.5”	10
HDWR-0021	Steel Hex Nut w/Tooth Washer 8-32	8
IPAD-0001	iPad Mini 2	1
MNTS-0001	Rubber mounts 25/12.5 lb	4
MNTS-0002	iPad Mini Mount Magnet and Tray	1

B) Log sprayer location and flow rate for each section only -

a) 1 to 5 On / Off Sections - Kit #2

b) 2 ONLY On / Off Sections - Kit #3

Part Number	**Part Description**	**Kit 2**	**Kit 3**
ADPT-0001	12V Vehicle to USB Adapter, AgOtter	1	1
ASSY-0002	AgOtter2 Controller	1	1
CABL-0006	GPS Antenna Cable - 6 feet	1	1
CABL-0010	Cable, Battery, PTO (96”)	1	1
	OR		

CABL-0021	Cable, Battery, ED (9”)	1	1
CABL-0014	Cable, Wheel	1	1
CABL-0015	Wheel Sensor (Mag Pickup Sensor)	1	1
CABL-0013	Cable, 1 Mag Meter	1	0
CABL-0020	Cable, 2 Mag Meters	0	1
CABL-0031	Cable, AgOtter2 Main Cable	1	1
BRKT-0001	AgOtter Mounting Bracket w/hardware	1	1
FLMT-0002	Flow Meter, Electromag 2.6 - 53 GPM	1	2
GANT-0002	GPS Antenna	1	1
HDWR-0012	Cable tie, Black, 14.5”	10	10
HDWR-0013	Cable tie, Black, 7.5”	10	10
HDWR-0021	Steel Hex Nut w/Tooth Washer 8-32	8	8
IPAD-0001	iPad Mini 2	1	1
MNTS-0001	Rubber mounts 25/12.5 lb	4	4
MNTS-0002	iPad Mini Mount Magnet and Tray	1	1

C) Log sprayer location and flow rate, along with control each section

a) 1 to 5 On / Off Sections - Kit #4
b) 2 ONLY On / Off Sections - Kit #5

Part Number	Part Description	Kit 4	Kit 5
ADPT-0001	12V Vehicle to USB Adapter, AgOtter	1	1
ASSY-0002	AgOtter2 Controller	1	1
CABL-0006	GPS Antenna Cable - 6 feet	1	1
CABL-0010	Cable, Battery, PTO (96”)	1	1
	OR		

CABL-0021	Cable, Battery, ED (9”)	1	1
CABL-0014	Cable, Wheel	1	1
CABL-0015	Wheel Sensor (Mag Pickup Sensor)	1	1
CABL-0013	Cable, 1 Mag Meter	1	0
CABL-0020	Cable, 2 Mag Meters	0	1
CABL-0031	Cable, AgOtter2 Main Cable	1	1
BRKT-0001	AgOtter Mounting Bracket w/hardware	1	1
FLMT-0002	Flow Meter, Electromag 2.6 - 53 GPM	1	2
GANT-0002	GPS Antenna	1	1
HDWR-0012	Cable tie, Black, 14.5”	10	10
HDWR-0013	Cable tie, Black, 7.5”	10	10
HDWR-0021	Steel Hex Nut w/Tooth Washer 8-32	8	8
IPAD-0001	iPad Mini 2	1	1
MNTS-0001	Rubber mounts 25/12.5 lb	4	4
MNTS-0002	iPad Mini Mount Magnet and Tray	1	1
VALV-0006	Control Valve, 1.5” dia, 4-pin Square	1	1

5. Plumbing Installation & Schematics

5.1. Flow Schematics, Legend & Install Notes

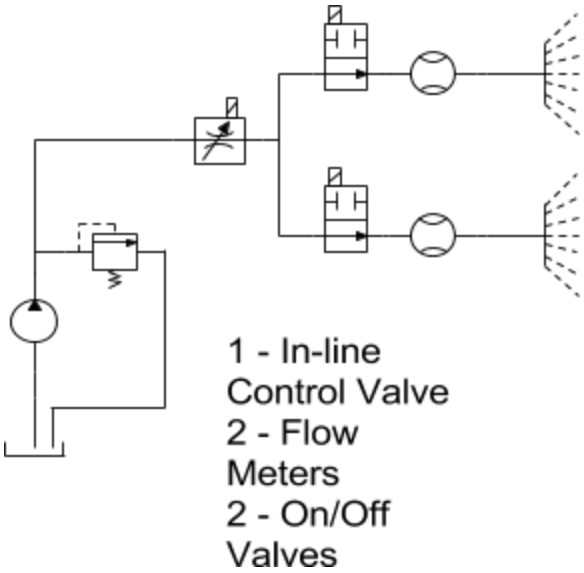

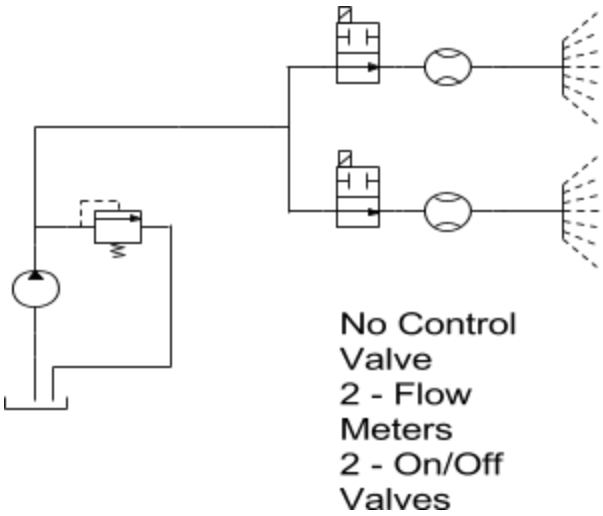

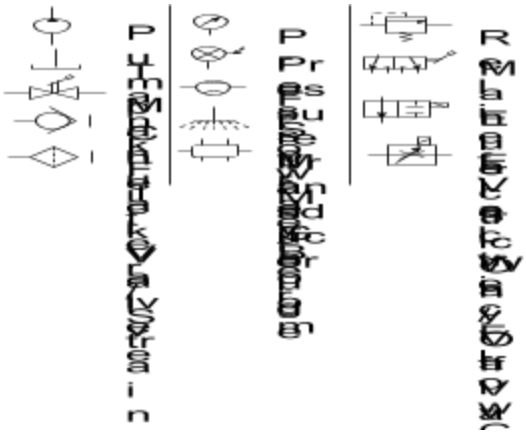

Schematic Legend

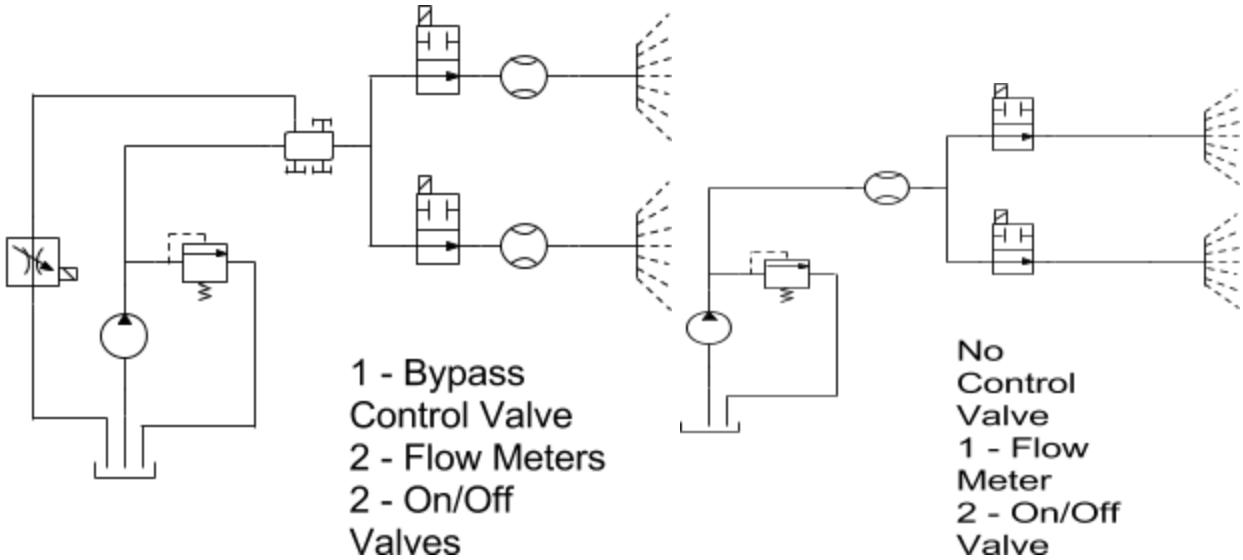
1 - Bypass
Control Valve
2 - Flow Meters
2 - On/Off
Valves
No
Control
Valve
1 - Flow
Meter
2 - On/Off
Valve

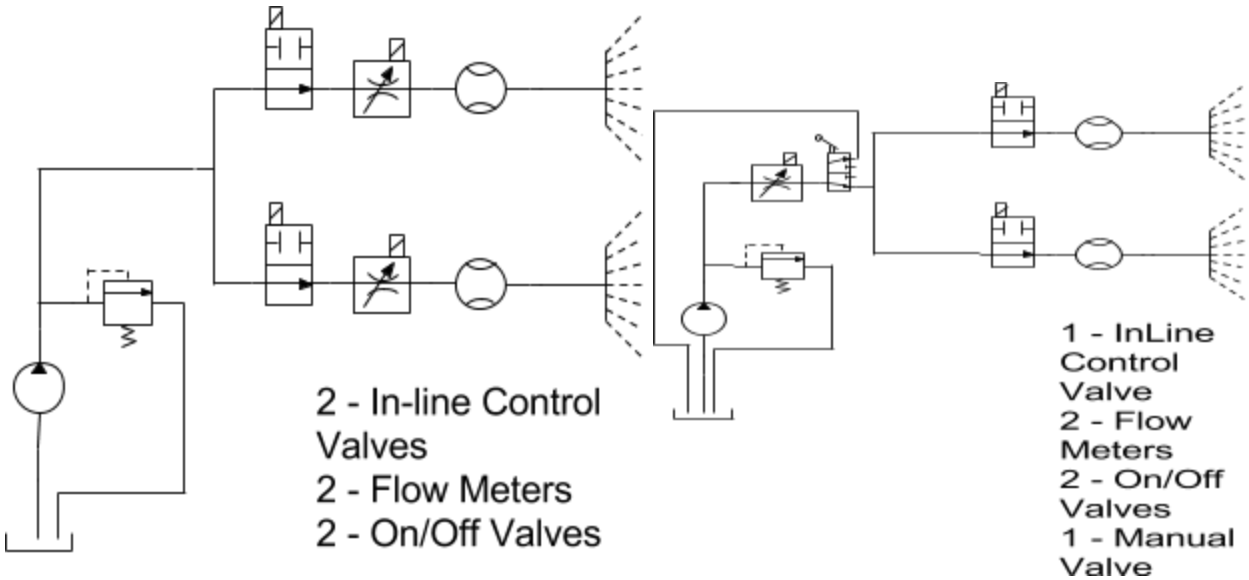
2 - In-line Control
Valves
2 - Flow Meters
2 - On/Off Valves
1 - InLine
Control
Valve
2 - Flow
Meters
2 - On/Off
Valves
1 - Manual
Valve

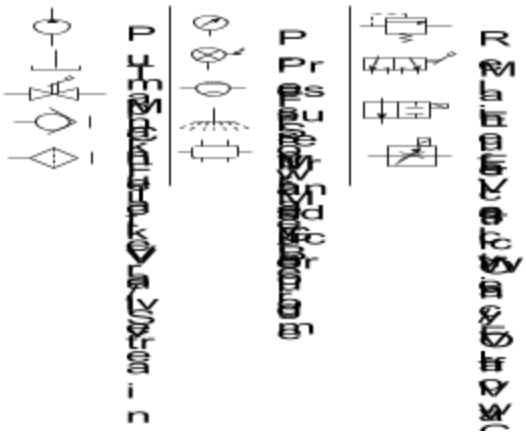

Schematic Legend

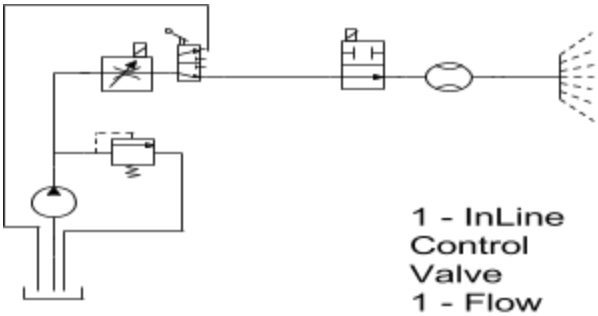

1 - InLine Control Valve
1 - Flow Meter
1 - On/Off Valve
1 - Manual Valve

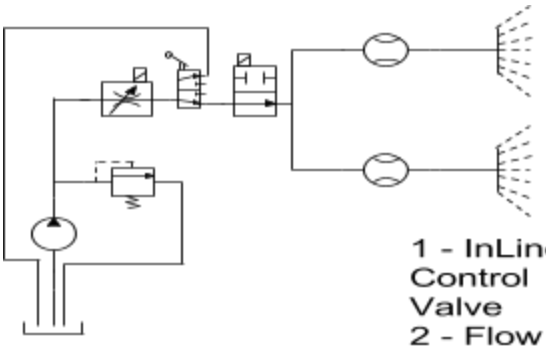

1 - InLine Control Valve
2 - Flow Meters
1 - On/Off Valve
1 - Manual Valve

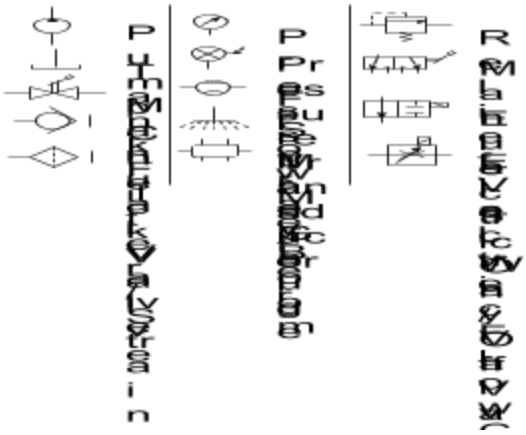

Schematic Legend

5.2. Notes about Schematics

1. ALWAYS make sure there is a relief valve in the system and that it has not been bypassed after the AgOtter installation is complete. A relief valve is essential and if bypassed could result in severe damage to the pump, plumbing system and/or personal injury.
2. The schematics shown are general purpose use and show samples of how the AgOtter system has been plumbed in various situations. There are other methods of plumbing the AgOtter system.
3. Make sure to install flow meter in correct orientation. See: Flow Meter Installation for more detail. Not installing in the correct orientation WILL result in an inaccurate flow meter readings.

SIDE NOTE: Piston and diaphragm pumps are called positive displacement pumps because of the way they create pressure by trapping a fixed amount of liquid and forcing it out. Because it forces the liquid out, a tremendous amount of pressure can be created and this is why a relief valve is required to prevent damage to the system. Positive displacement pumps create pressure in pulses and are typically used when higher pressure is required.

The other type of pump is a centrifugal pump, which uses a spinning impeller to accelerate the liquid, thus creating pressure. For this pump, if the liquid is trapped it will “slip” past the impeller and typically not damage the system. A centrifugal of pump creates a consist pressure.

6. System and Components Installation

6.1. Power Cable - Used to power the system.

A) An AgOtter System is powered from 9 to 16 Volts
B) Connect the **Red lead** on the power cable **to + or positive battery terminal**
C) Connect the **Black lead** on the power cable **to the - or negative battery terminal**

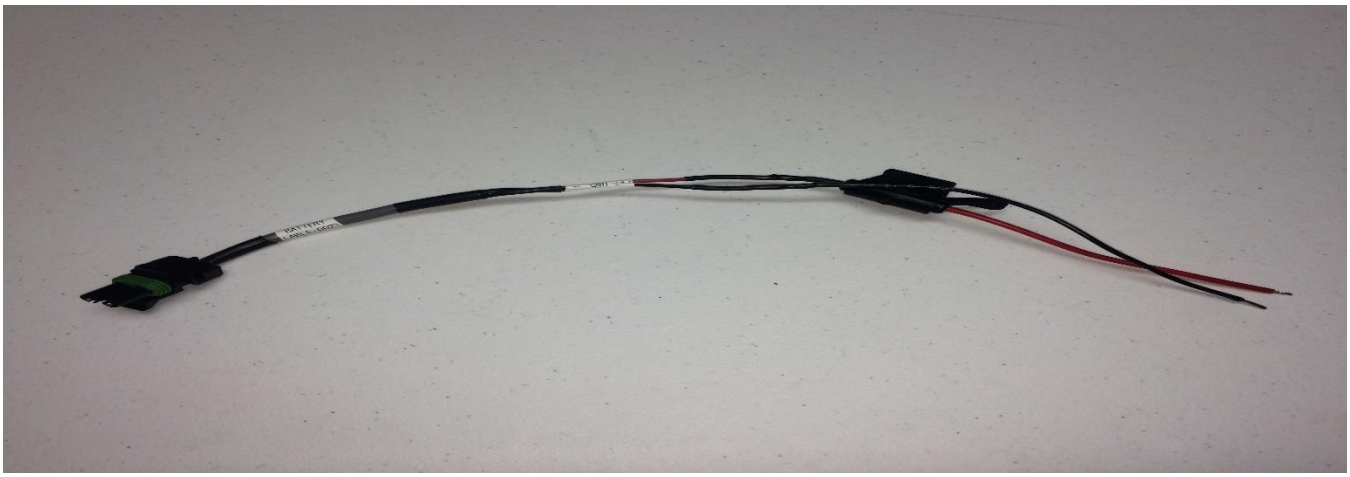

Figure 1: AgOtter Power Cable for Engine Driven Sprayers (CABL-0021)

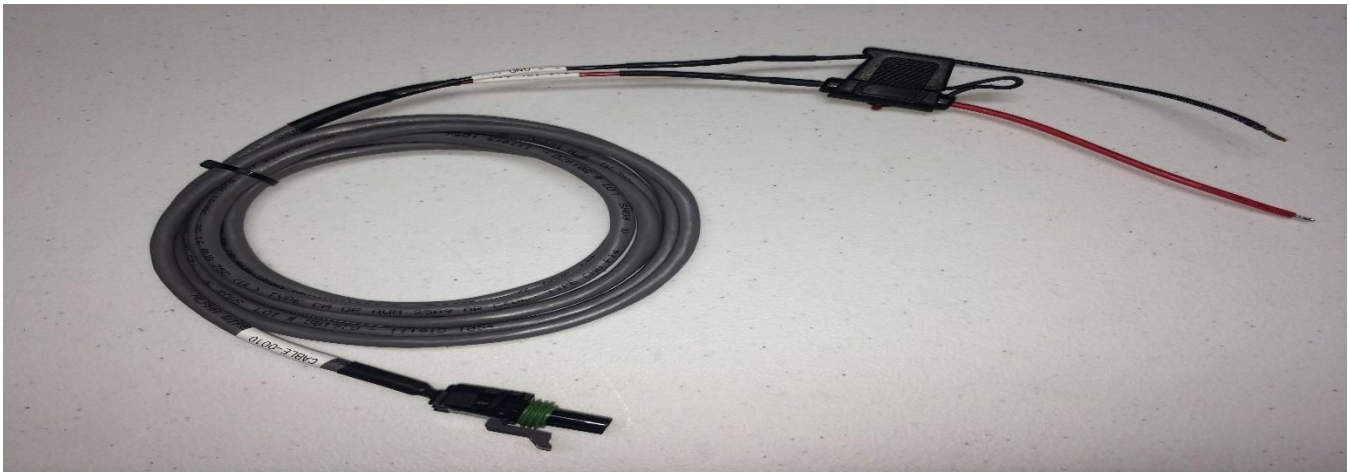

Figure 2: AgOtter Power Cable for PTO Sprayers (CABL-0010)

6.2. Flow Meters - Used to measure flow.

A) Electromagnetic flow meters measure the quantity of fluid passing through it and has no moving parts.
B) Turbine flow meters have a turbine that spins as fluid moves past. A magnet on the outside of the meter can sense the turbine blades as they pass by, creating a pulse. The number of pulses measured per second corresponds to a flow.
C) Install flow meter at least 20 cm from elements which could cause turbulence, like elbows, pumps or a control valve.
D) The AgOtter controller works with any flow meter which outputs a pps (pulse per second) signal. This signal corresponds to the amount of flow going through the meter; the more pulses the more flow, the less pulses the less flow.

E) Install flow meter in either a vertical or horizontal orientation. (See diagram below.)
   a) If the flowmeter is installed in a horizontal orientation, the cord needs to come out of the bottom. See diagram below.
   b) If the flowmeter is installed in a vertical orientation, the cap with the cord can be pointing in any direction.

   NOTE: See diagram below for more info on flow meter mounting.

F) Install flow meter with arrow on the side of meter in the direction of fluid flow
G) Wiring is as follows:
   a) Pin 1 - is GND
   b) Pin 2 - is +12 VDC
   c) Pin 3 - is the signal wire, which is a square wave output.
H) Operating Temperature for the flow meter is 32 ℉ (0 ℃) to 140 ℉ (60 ℃).
I) Storage Temperature for the flow meter is -4 ℉ (-20 ℃) to 140 ℉ (60 ℃).

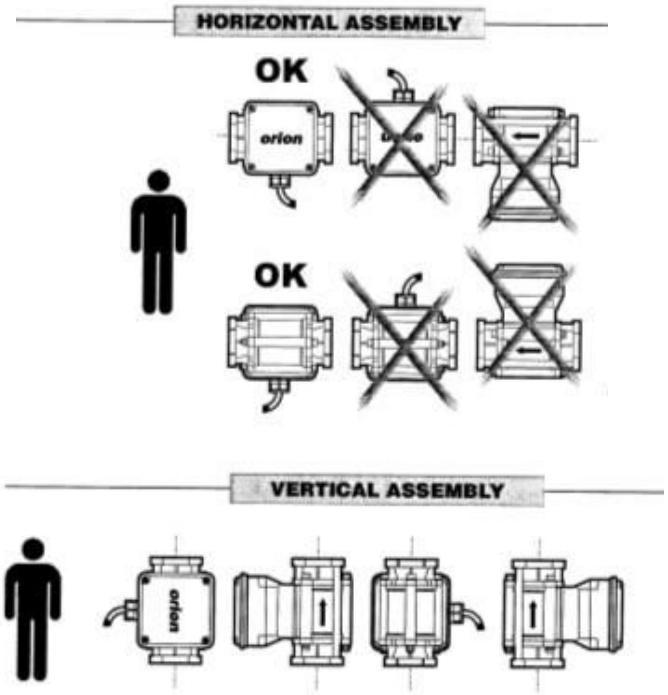

Figure: Flow Meter Mounting Requirements. Note direction of arrow and location of cable coming out of the flow meter

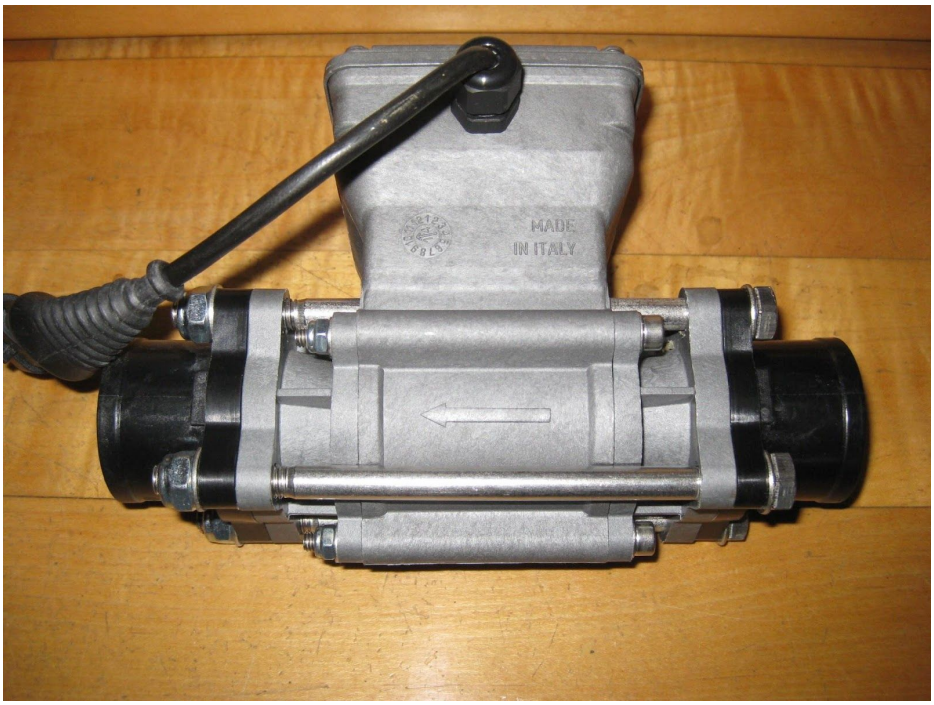

Figure 3: AgOtter Electromagnetic Flowmeter. In this photo flow is right to left, ⬅ direction

6.3. Flow Control Valve - Used to control sprayer output flow.

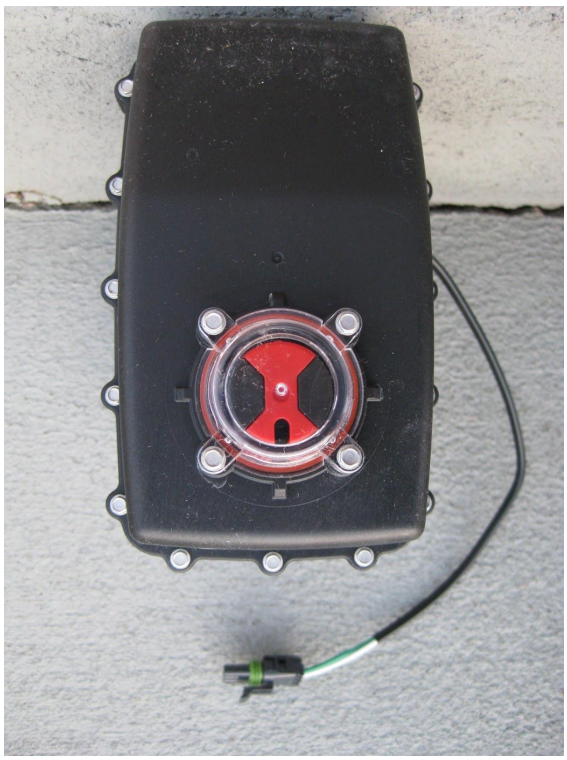

Figure 4: Control Valve - NOTE: Red indicator shows valve position, photos show valve in Closed Position ⬇ (i.e ➡ = Open Position in the above photos and ⬇ = Closed Position)

NOTE: There are no specific orientation mounting requirements for the KZ Control Valve.

6.4. AgOtter Controller - “Brains of the system”

A) Check controller firmware as sometimes a new firmware is released after a controller is shipped.
B) An AgOtter Controller works with 9 to 16 Volts.
C) The controller must be installed horizontally only and square to the sprayer so that either the long or short side is facing straight forward. See diagram.

D) LED on Controller:

a) Power Sequence: Two blue flashes, short solid red, solid blue is normal start up sequence.

b) Operation: When the AgOtter controller receives a signal from the wheel sensor it changes in between green and blue. Every blink is a “pulse” from the wheel sensor indicating that a lug bolt has just passed by the sensor.

c) Programming: When new firmware is being loaded, LED will rapidly blink blue.

Figure 5: AgOtter Controller

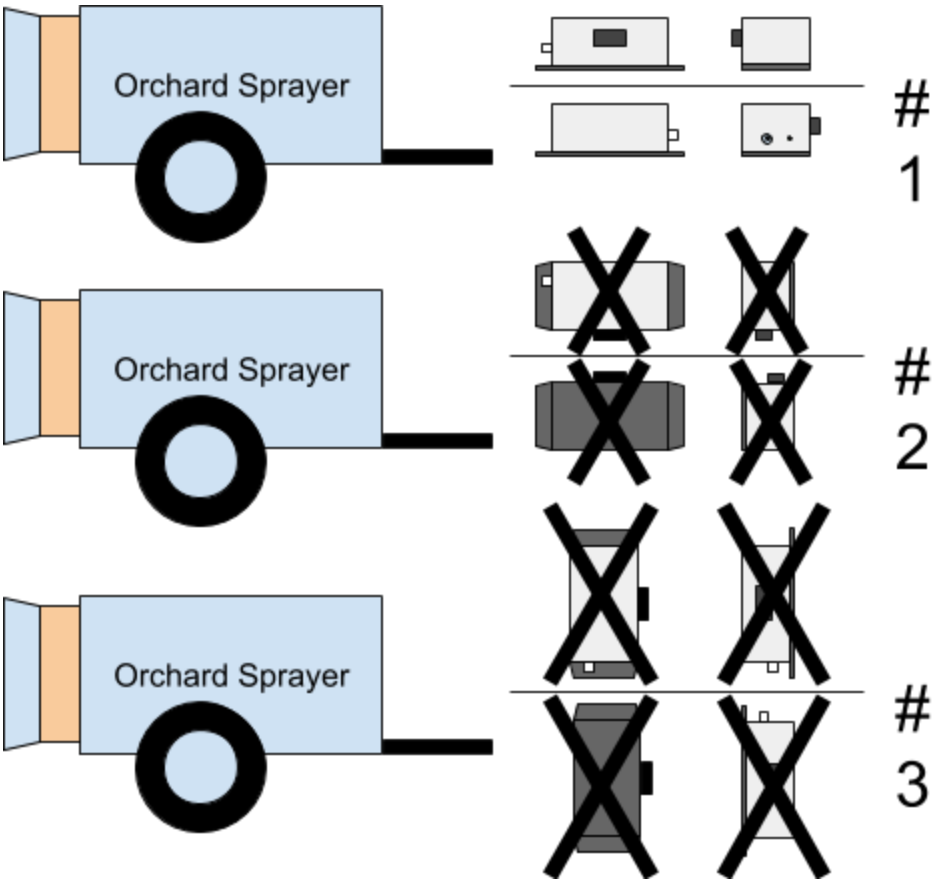

Figure 6 : AgOtter Controller Mounting Orientations

Orientation shown in #1 is acceptable

Orientations shown in#2 and #3 are NOT acceptable

6.5. Speed Sensor

A) Used to measure sprayer speed and Latitude / Longitude position when GPS signal is not available.

B) Install the Speed Sensor in one of the wheels of the sprayer. It is required that it is installed on the back side of the axle to protect the sensor from objects in the field.

C) The sensor needs to “see” the lug bolts as they pass by. It does not need to touch the lug bolts as it is a magnetic sensor that can detect steel. The gap between the sensor and the lug bolts should be around 1/16 of an inch. If the speed sensor is too far from the lug bolts (i.e. ¼ inch or greater), speed on the AgOtter will be erratic.

D) Once speed sensor is installed, verify it is working correctly for ALL lug bolts. Do this by moving sprayer at a very slow speed and watching the LED on the AgOtter Controller. Every time a lug nut passes by the speed sensor the LED will blink. Also the “Verify” screen on the AgOtter App will display “Bolt Detected” every time a lug nut passes the sensor.

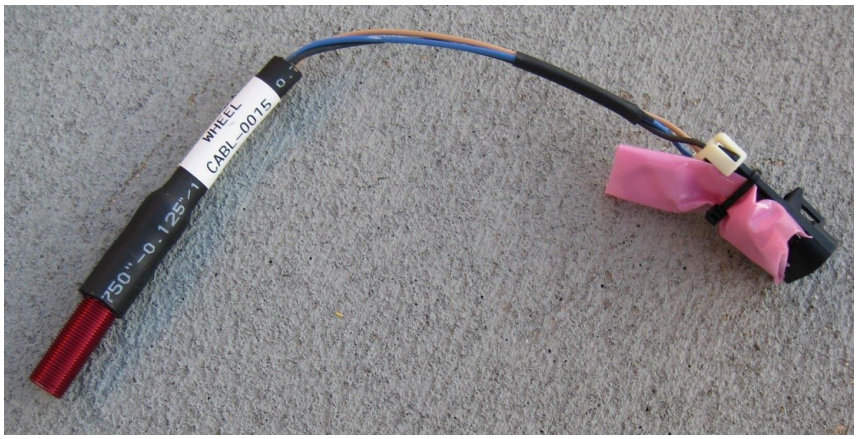

Figure 7: Wheel Sensor

Figure 8: Wheel Sensor installed on a sprayer, Axle and Wheel shown also. Install with around a 1/16 inch gap between sensor and lug bolts.

6.6. GPS Receiver Antenna - Used to calibrate system and mapping.

A) GPS Receiver is located inside the AgOtter controller.
B) The GPS Receiver will not work unless antenna is plugged in and has a clear view of the sky. **When spraying under trees, GPS may not work due to the tree canopy but the AgOtter system will still record location and spray rate along with control spray rate.
C) The ideal mounting location for the GPS antenna is where it has a clear view of the sky and not obstructed by parts of the sprayer, but is also protected from tree branches hitting it.
D) To mount the antenna, drill a 23/32 to 3/4 inch (18 to 19 mm) diameter hole.
E) Place antenna with rubber washer through the hole.
F) Place metal washer, then the 2 nuts on the antenna.
G) Tighten the first nut then the second one.

NOTE: Wherever the GPS antenna is located system will record this location. Offsets to specify where the spray boom is located from the GPS antenna can be set in the AgOtter App.

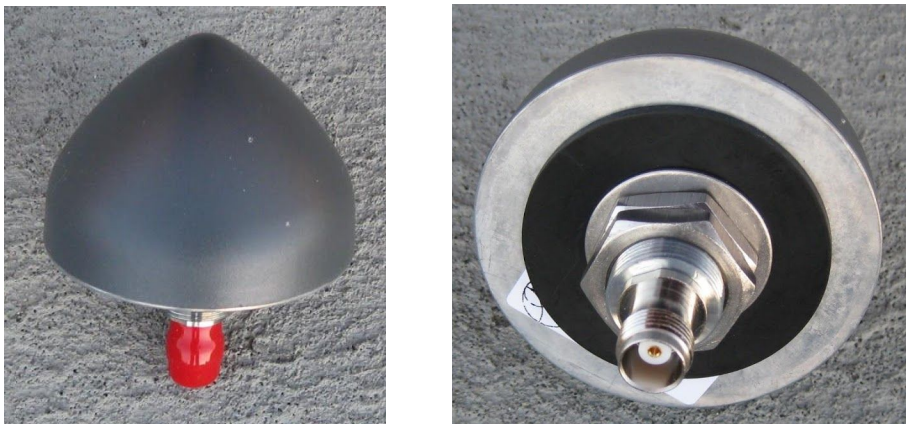

Figure 9: Top and bottom view of GPS antenna

6.7. Cables - Used to interconnect system components

A) Below are the cables needed to install a system.

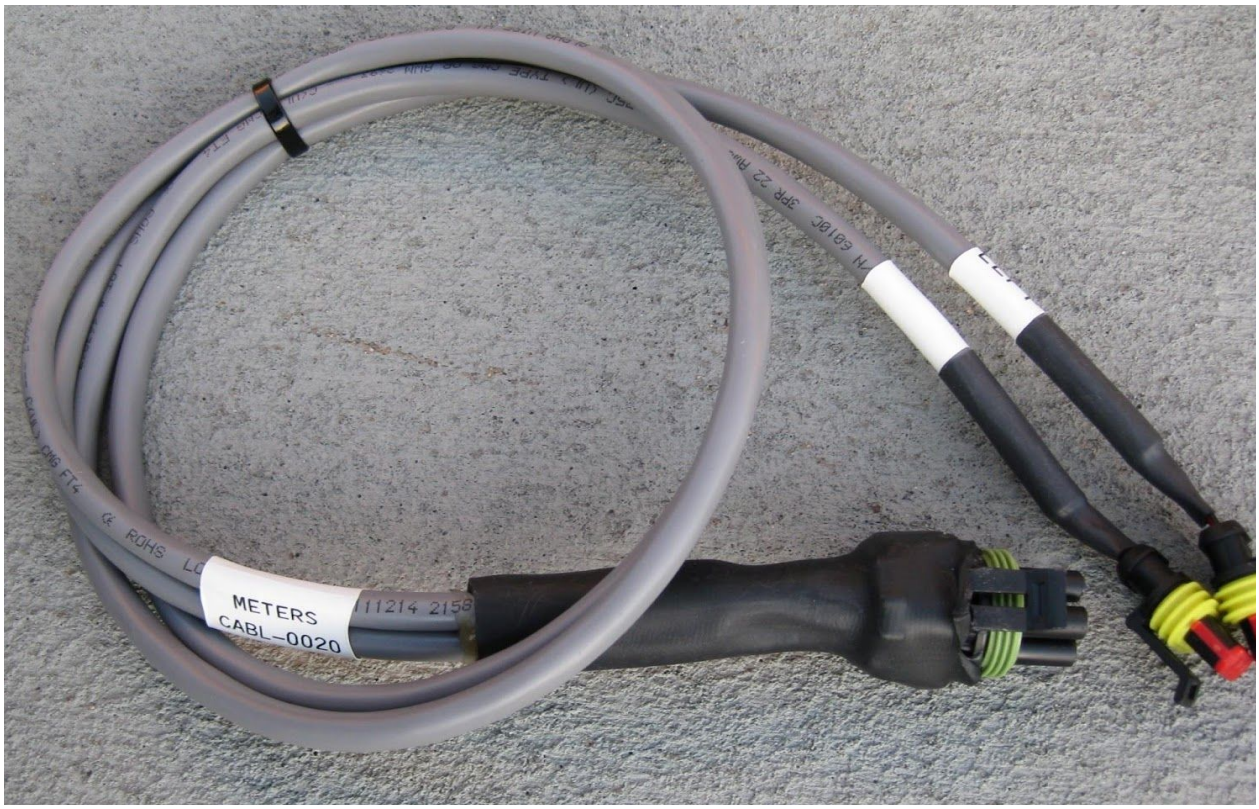

Figure 10: Flow Meter Cable, 2 Flow Meters - Connects to the Main Cable and the Flow Meter(s)

Figure 11: GPS Antenna Cable - Connects to the GPS Antenna and the AgOtter Controller

Figure 12: Main Cable - Connects the AgOtter Controller, Flow Meter Cable, Power Cable, Control Valve Cable, Wheel Sensor Cable and On/Off Valves.

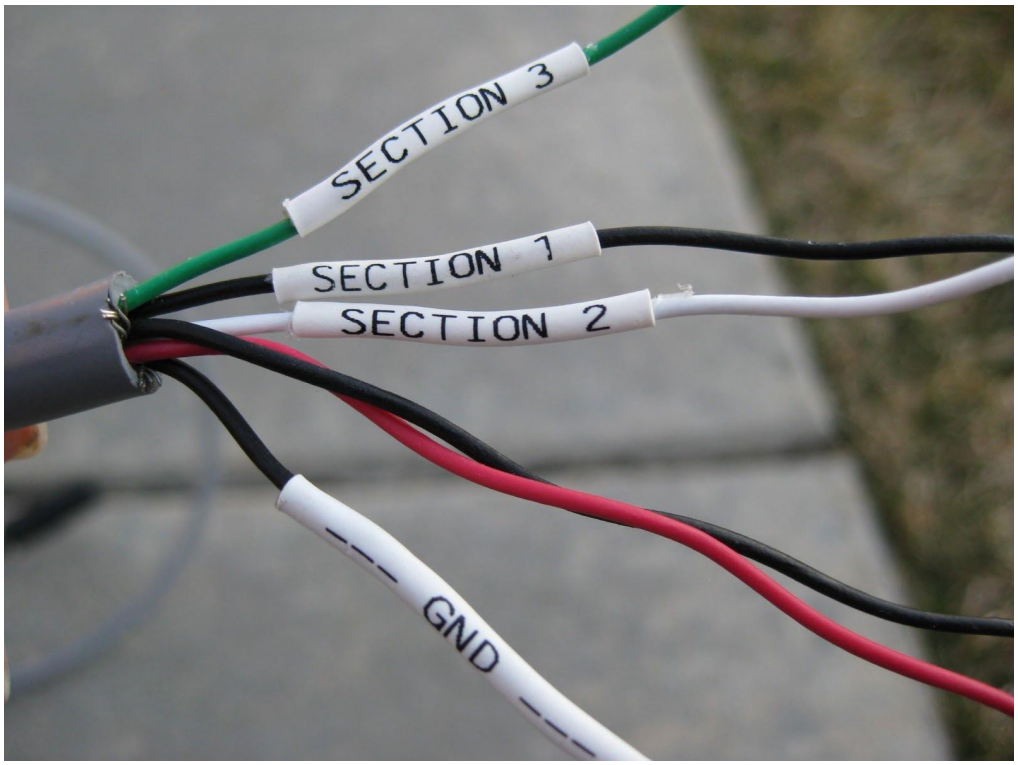

Figure 13: AgOtter Main Cable: Connection to On/Off Valves.

NOTE: This is NOT used for control of the on/off valves, only to sense their position!

Black from Black/White pair (Section 1 label) = Section 1 On/Off Valve Switch
White (Section 2 label) = Section 2 On/Off Valve Switch
Green (Section 3 label) = Section 3 On/Off Valve Switch
Black from Green/Black pair = Section 4 On/Off Valve Switch (label not pictured)
Red = Section 5 On/Off Valve Switch (label not pictured)
Black from Red/Black pair (--- GND --- label) = Common ground (label not pictured)

Figure 14: Wheel Sensor Extension Cable (14’)

7. Electrical Schematics

NOTE: System is powered with 9 to 16 Volts DC.

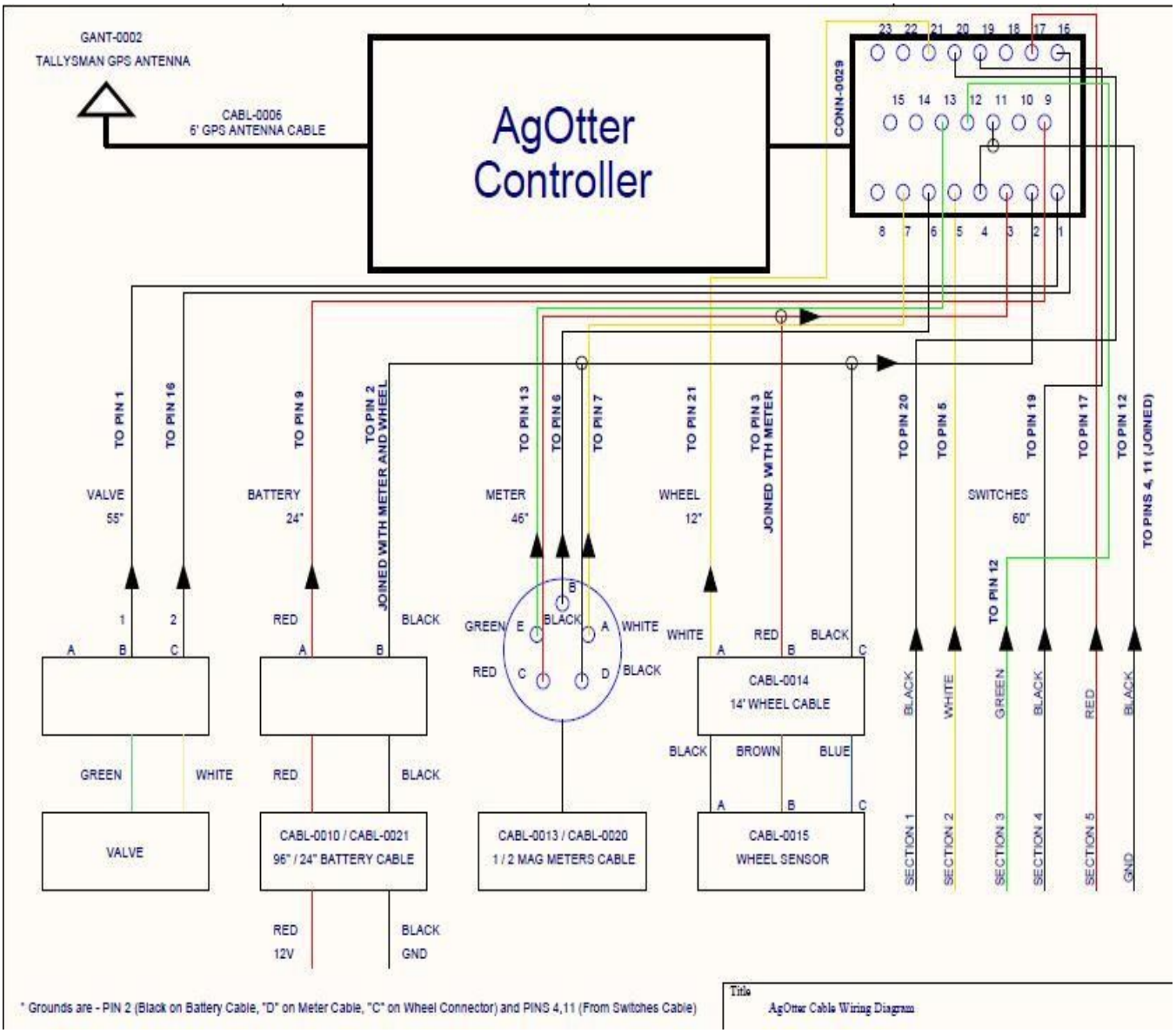

Figure 15: AgOtter Wiring Diagram

Above diagram is for 2-pin valve configuration. See alternate schematic for 4-pin valve.

8. iPad & Mounting

NOTE: An iPad, iPhone, or iPod can be used to setup, monitor and download files from the AgOtter Controller. There are marketing kits to ship with (MKIT-0018) or without (MKIT-0019) an iPad.

8.1. iPad - Final Installation Steps once AgOtter hardware is installed

NOTE: Once the AgOtter hardware, i.e. controller, valves and cables, have been installed and the AgOtter system is powered, it is ready to be setup using the iPad.

List of Parameters to Set (before operating the AgOtter System)	
Parameter Name	**Screen where Parameter is Located**
Target Rate	Main Run Screen → Setup
Row Width	Main Run Screen → Setup
Tank Volume	Main Run Screen → Setup
Min Target Flow Rate Alarm	Main Run Screen → Setup → Alarms
Max Target Flow Rate Alarm	Main Run Screen → Setup → Alarms
Low Speed Alarm	Main Run Screen → Setup → Alarms
High Speed Alarm	Main Run Screen → Setup → Alarms
Flow Meter Cal (for 1 flow meter)	Main Run Screen → Setup → Advanced
Left Meter Cal (for 2 flow meters)	Main Run Screen → Setup → Advanced
Right Meter Cal (for 2 flow meters)	Main Run Screen → Setup → Advanced
Wheel Bolt	Main Run Screen → Setup → Advanced
Valve Return to Tank (switch)	Main Run Screen → Setup → Advanced
Use Two Meters (switch)	Main Run Screen → Setup → Advanced
Antenna to Sprayer Axle	Main Run Screen → Setup → Advance → Sprayer Measurements

Spray Offset	Main Run Screen → Setup → Advance → Sprayer Measurements
Metric Units	About → Preferences

A) Charge the iPad before taking to the field.
B) Connect to the AgOtter controller via Bluetooth.
   a) Power on the AgOtter Controller
   b) Select “Settings” icon on the iPad
   c) Select “Bluetooth” and make sure the slider is in an “On” position. (Right orientation)
   d) The iPad is now ready to talk with the AgOtter controller by starting the AgOtter app

Figure 16: AgOtter App Icon

Figure: Preferences Screen

C) In the “Detecting Devices” screen, select the AgOtter controller to be setup. This will display the main run screen for the AgOtter controller.

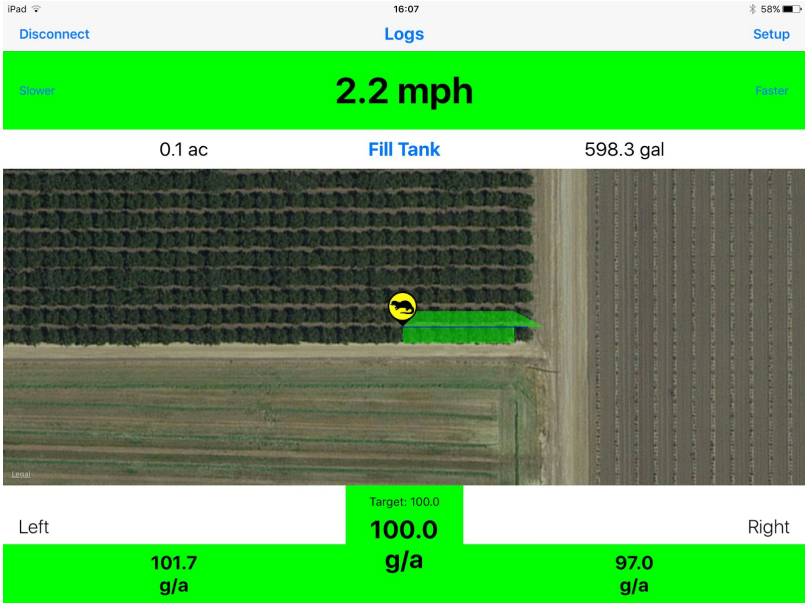

Figure 17: Ag Otter Main Run Screen

D) Press “Setup” in the main run screen and change the following parameters:
   a) Press “Target Rate” - This is the desired flow rate which the AgOtter control valve will maintain while spraying. This value is in gallons / acre (liters / hectare).
   b) “Row Width” - This is the value between sprayer passes. This value is in feet (m).
   c) “Tank Volume” - This is the maximum water capacity of the sprayer. This value is in gallons (liters).

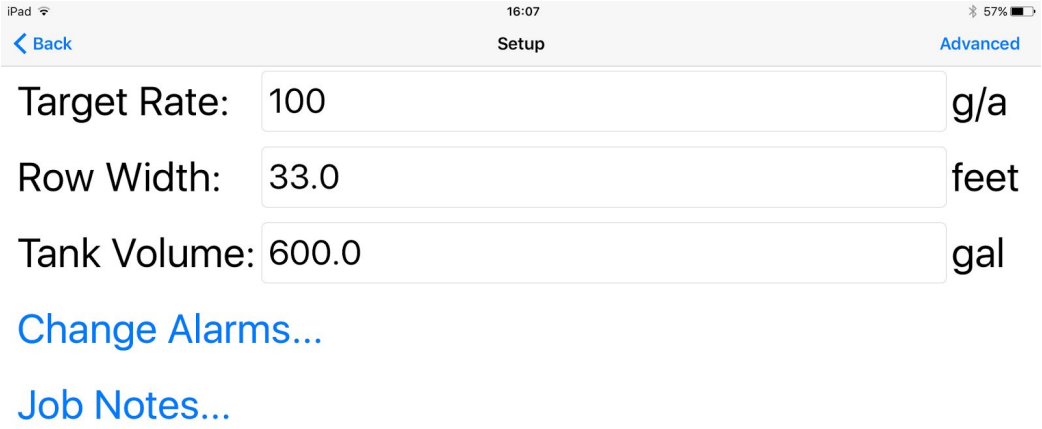

Figure 18: Setup screen

E) Press “Change Alarms” screen in the Setup screen and go to the alarms screen to set the following parameters:

a) Press “Min” and set - This is the percent below the target flow rate at which the Run Screen will display a warning. This value is in gallons / acre (liter / hectare).
b) Press “Max” and set. - This is the percent above the target flow rate at which the Run Screen will display a warning. This value is in gallons / acre (liter / hectare).
c) Press “Low: under Speed - If the sprayer speed falls below this value, a warning will display. This value is in miles per hour (kilometers per hour).
d) Press “High:” under Speed. If the sprayer speed goes above this value, a warning will display. This value is in miles per hour (kilometer per hour).
e) Press “Setup” in the upper left corner to go back to the Setup Screen.

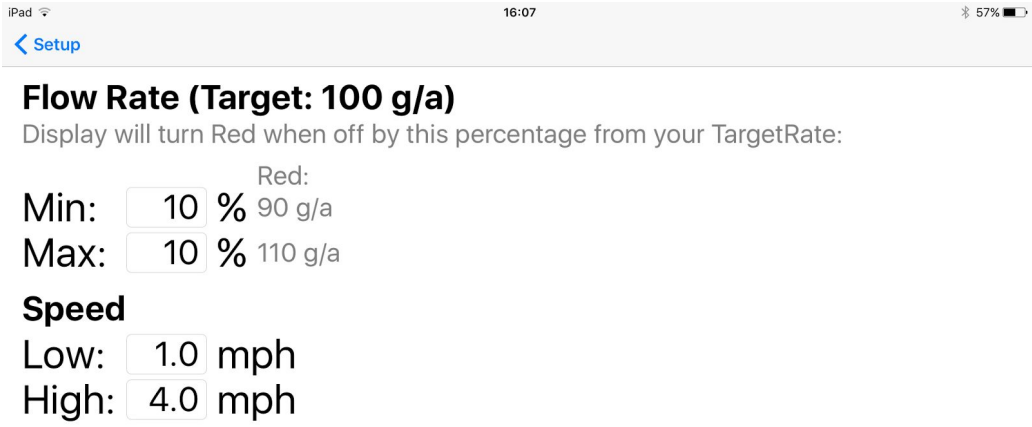

Figure 19: Alarms trigger values screen

F) From the Setup screen, press “Advanced” and set the following parameters:
a) Press “Left Meter Cal” and set - This is the pulses per gallon (ppg) (pulses per liter (ppl)) for the left side flow meter. This value can be found on the flow meter label. See “Flow Meter Calibration” in the manual for more detail.
b) Press “Right Meter Cal” and set - This is the pulses per gallon (ppg) (pulses per liter (ppl)) for the right side flow meter. This value can be found on the flow meter label. Refer to “Flow Meter Calibration” section in the manual on how to determine this value.
c) Press “Tire Circumference:” and set - Refer to “Wheel Sensor / Tire Circumference Calibration” section in this manual for more detail on how to determine this value.
d) Press “Wheel Bolts:” and set - This is the number of lug nuts on the wheel with the speed sensor
e) Aggressiveness: This is how aggressive the controller is to changes in speed. A higher number is more aggressive and will get to a given flow rate quicker BUT it will have a higher chance of going unstable. It is recommended this value is set at 4.’
f) Turn on / off “Valve Return To Tank”: This is turned on (slider to the right) if the flow out of the control valve is returned directly to the tank.

g) Turn on / off “Use Two Meter”: If the AgOtter system is using 2 flow meters, this needs to be turned on (slider to the right). If the system is using 0 or 1 flow meter, this should be turned off (slider to the left).

h) Press on “Sprayer Measurements”. The “Measurements” screen will appear.
   i) Press on “Antenna Offset” and set. This is the distance from the sprayers axle to the GPS antenna in feet (meters). If the sprayer has tandem axles, use the center between the 2 axles to the GPS antenna distance.
   ii) Press on “Spray Offset” and set. This is the distance from the sprayer’s nozzle bank to the GPS antenna in feet (meters).

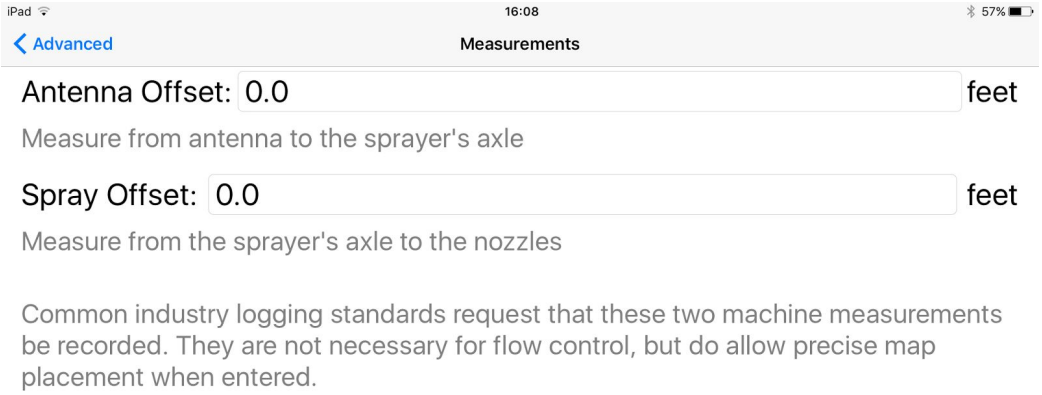

Figure 20: Measurements Screen

i) Press on “Advanced” in the upper left corner to go back to the “Advanced” screen.

j) Press on “Verify” in the upper right hand corner. **This screen the “Verify” screen and is used for troubleshooting.** It displays the following information
   i) AgOtter Box Version : The version of software on the AgOtter controller
   ii) Wheel Sensor: Will blink “Bolt Detected” every time the sensor detects a lug bolt has passed.
   iii) Left Flow / Right Flow - This is the flow value measured by the flow meter for the left and right flow meters.
   iv) Valve: This opens and closes the control valve. Press on “Open” to open the control valve or “Close” to close the control valve.
   v) GPS satellites: This is the number of GPS satellites which are in view of the GPS antenna.
   vi) HDOP: Horizontal Dilution of Precision: Is a value which represents the horizontal accuracy of the GPS receiver. The lower the value the better the accuracy.
   vii) Fix: 1 – Denotes regular GPS. 2 – Denotes Differential GPS.
   viii) Valid: Denotes that GPS has acquired a valid position.

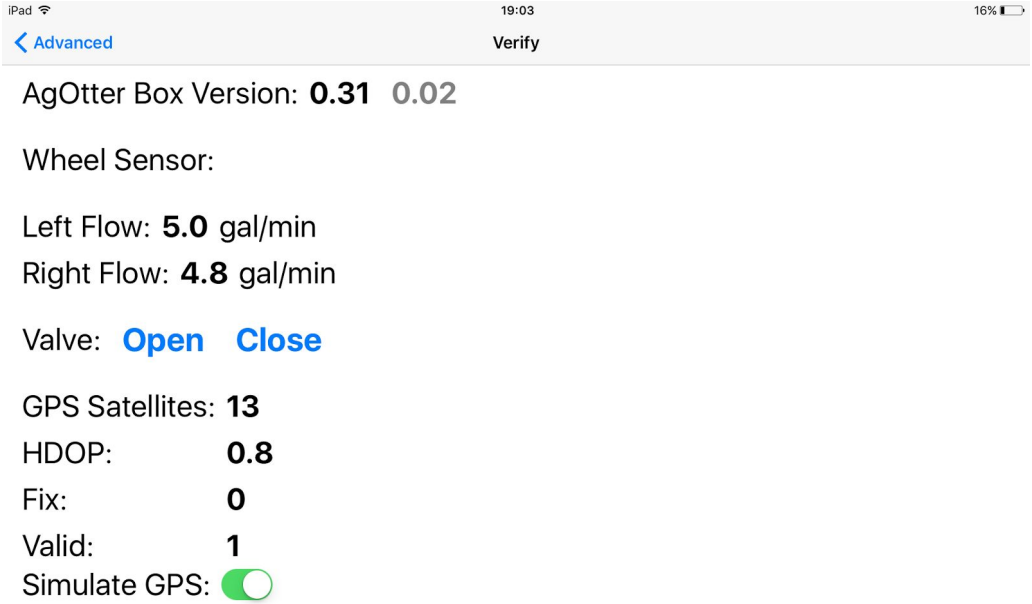

Figure 21: "Verify" Screen - Used for troubleshooting purposes

k) From the "Verify" screen, press the word "Advanced" to go to the "Advanced" screen.
l) From the "Advance" screen, press the word "Setup" to go to the "Setup" screen.
m) From the "Setup" screen, press the word "Back" to go to the Main Run screen.

G) From the "Detecting Devices Screen", press on the word "Preferences" in the About screen.
H) Once the AgOtter App has started, the "Detecting Devices" screen will appear.

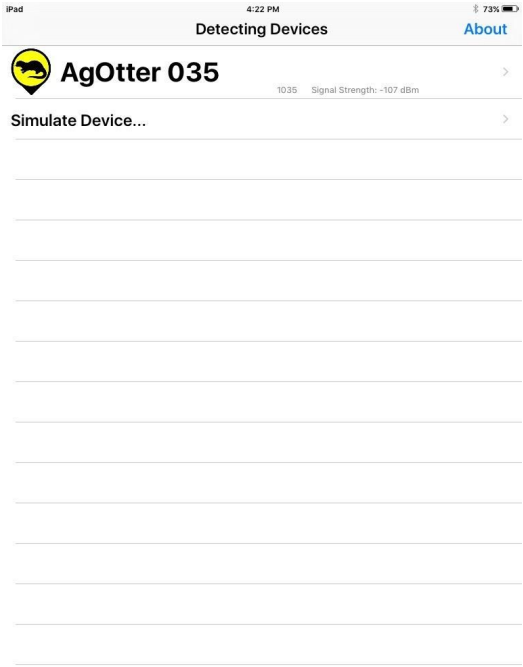

Figure 22: AgOtter “Detecting Devices” Screen

Figure 23: AgOtter “About” screen

I) In the Preferences Screen, leave “Stabilize Flow Rate at Target:” on (switch the right).
J) In the Preferences Screen, turn “Metric Units:” on if this is the desired units.

8.2. iPad - Operating the AgOtter System

A) When spraying in a field use the “Main” run screen

B) When sprayer is refilled make sure to press the “Fill Tank” in the middle of the screen to indicate the sprayer has been refilled.

Figure 24: “Main” run screen with no system alarms

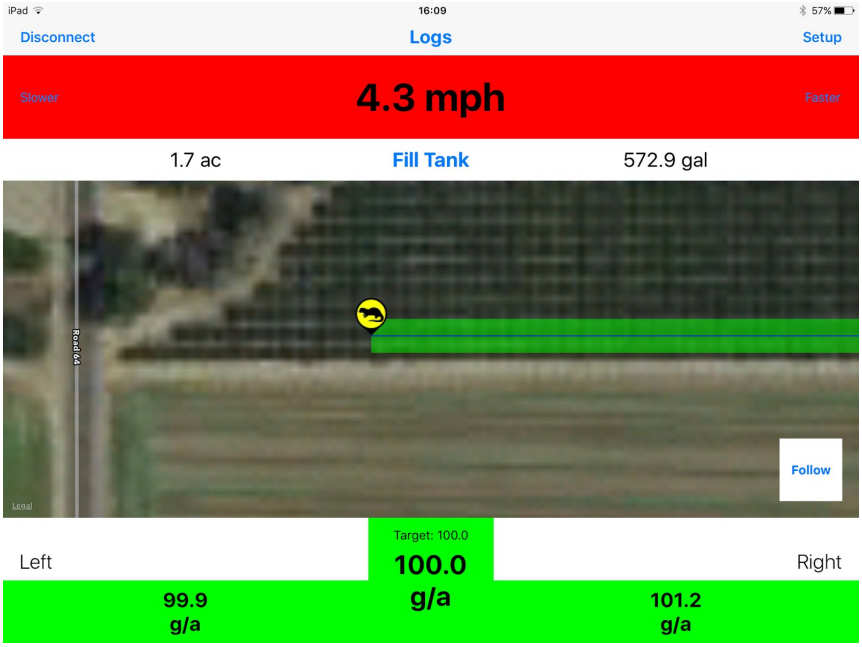

Figure 26: “Main” run screen showing a high speed alarm

8.3. iPad - Downloading Log Files

NOTE: See “Log Files” Section in this manual

8.4. iPad - Mounting & Brackets

Figure 26: Photos showing the iPad and the mounting device

9. Calibration

WARNING: The Flow Meters and Wheel Sensors need to be calibrated. It is EXTREMELY important that these component are calibrated before using the system. If they are not calibrated, errors in measured flow and sprayer output flow may occur.

9.1. Flow Meter Calibration

A) Fill Sprayer with water
B) Verify that Calibration values for each flow meter are in the AgOtter controller. These values are in pls/GAL (pls/lit) and are found on the flow meter label.

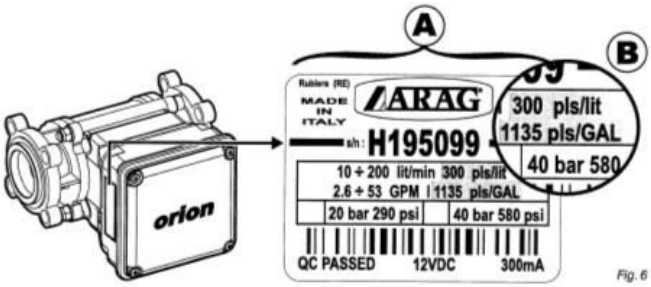

C) Place sprayer on level surface, use a level to make sure sprayer is level.

Figure 27: Level on Orchard Sprayer verifying it is level before starting calibration

D) Connect the iPad to the AgOtter Controller.

E) Verify in Setup that Tank Volume matches the actual tank value. (i.e. if maximum tank volume is 600 gal, then the Tank Volume on the iPad should say 600.0 gal)

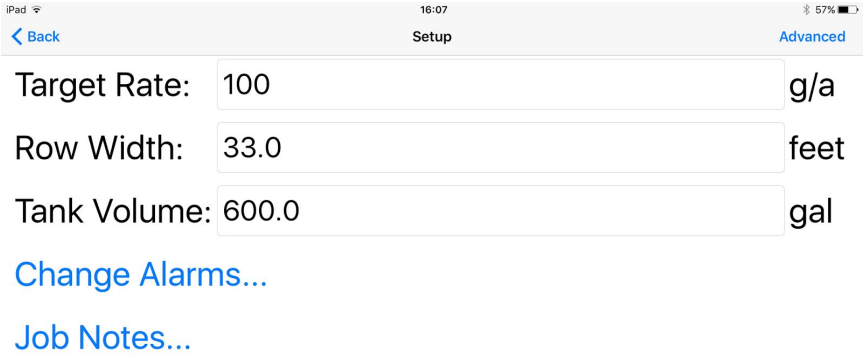

F) On the run screen verify the AgOtter controller shows the tank volume correctly. If it does not say the capacity, press “Fill Tank”. (i.e. if maximum tank volume is 600 gal, then volume should say 600 gal.)

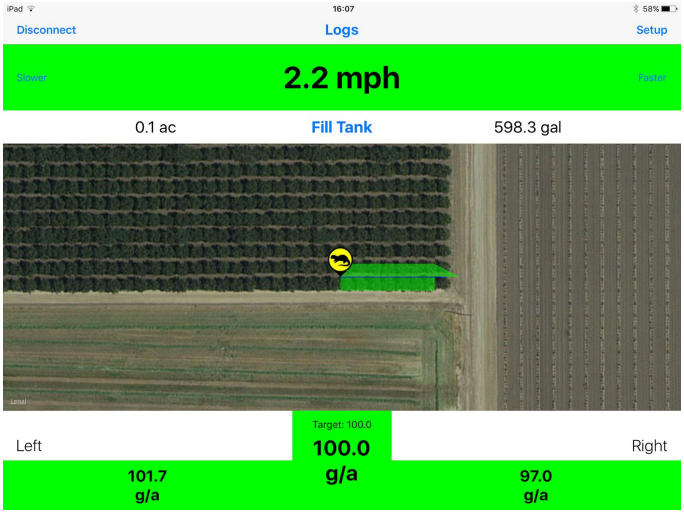

Figure 28: AgOtter Main Run Screen

G) Spray out ½ of the liquid in the sprayer on 1 side of the sprayer only. (i.e using only 1 flow meter, see photos below for example.) NOTE: The larger the amount of liquid sprayed out, the more accurate the calibration will be.

Figure 29: Photo 1 is showing a sprayer spraying out only 1 side during calibration. Photo 2 is showing a sprayer that has sprayed out ½ of the tank.

H)

a) From main AgOtter screen, record the amount of liquid sprayed. This is the amount the system “thinks” was sprayed or the “perceived amount sprayed”.
b) On the sprayer sight gauge, verify how much liquid was actually sprayed out. This is the “actual amount sprayed”.
c) On the side which was sprayed out, change the flow meter calibration value using the following equation:

$$Existing\ Flow\ Meter\ Cal\ Value\,(\frac{pls}{gal})\ X\ \frac{Perceived\,(AgOtter\ iPad)}{Actual\,(Tank\ Reading)} = New\ Flow\ Meter\ Cal\ Value$$

d) Press “Setup”
e) Press “Advanced”
f) Press “Left Meter Cal” or “Right Meter Cal”
g) Enter New Flow Meter Cal Value
h) Press “Done”

I) Now to repeat for other side of sprayer:
J) Press the “Fill Tank” words on the iPad. (Volume on iPad should say full tank, but tank is actually only ½ full.)
K) Spray out the remaining liquid in the tank

a) From main AgOtter screen, record the amount of liquid sprayed in which it displays was sprayed out.
b) On the sprayer sight gauge, verify how much liquid was actually sprayed out.
c) On the side which was sprayed out, change the flow meter calibration value using the following equation:

$$Existing\ Flow\ Meter\ Cal\ Value\ (\frac{pls}{gal})\ X\ \frac{Perceived\ (AgOtter\ iPad)}{Actual\ (Tank\ Reading)} = New\ Flow\ Meter\ Cal\ Value$$

d) Press “Setup”
e) Press “Advanced”
f) Press “Left Meter Cal” or “Right Meter Cal”
g) Enter New Flow Meter Cal Value
h) Press “Done”

L) Verify both right and left reading are corrected based on the changes.

9.2. Wheel Sensor / Tire Circumference Calibration

NOTE: This calibration is done to verify the correct distance traveled per 1 revolution of the tire on the sprayer.

A) Fill the sprayer ½ full with water so the tire has some weight on it.
B) Find a concrete pad where you can drive sprayer in a straight line about 20 feet.
C) Put the sprayer on the concrete pad.
D) Mark the bottom of the tire, see diagram below.
E) Mark the concrete, see diagram below.

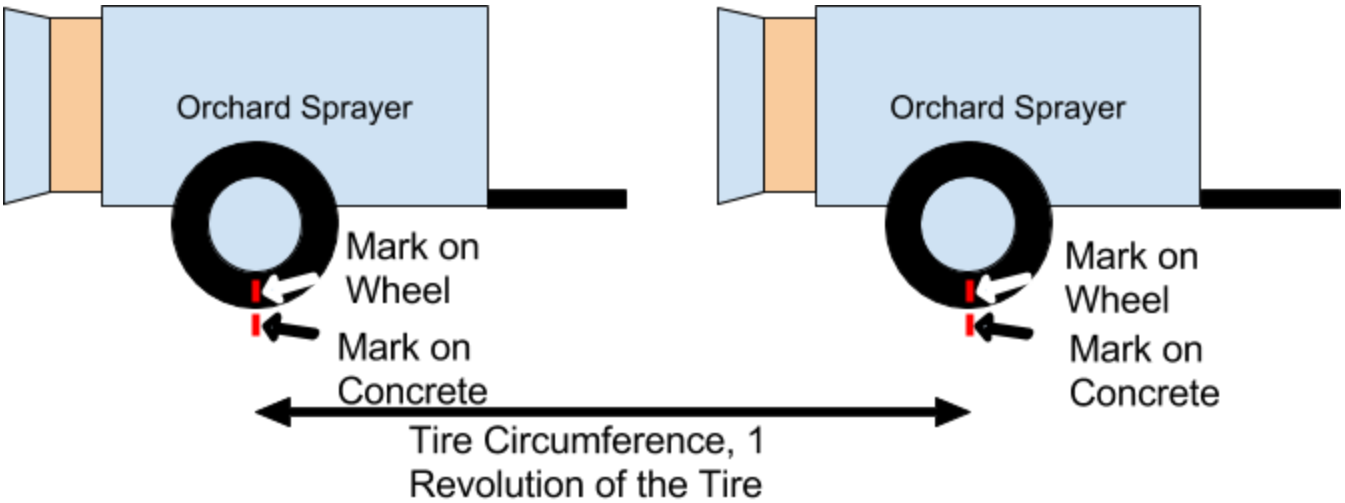

F) Drive the sprayer forward 1 revolution on the tire.
G) Mark the concrete in this location.
H) Measure the distance between the 2 marks on the concrete.
I) Enter this value in the AgOtter controller
    a) Press “Setup”

b) Press “Advanced”
c) Press “Tire Circumference”
d) Enter distance between lines on the concrete
e) Press “Done”

10. Log Files

10.1. Downloading Log Files from AgOtter Controller (Bluetooth)

NOTE: Log files are stored on the AgOtter Controller. There is enough memory to store at least 1 full season of data on the AgOtter controller.

A) With the iPad connected to the AgOtter controller, start the AgOtter app and connect to the controller.
B) On the map screen press the word “Logs” at the top of the screen.

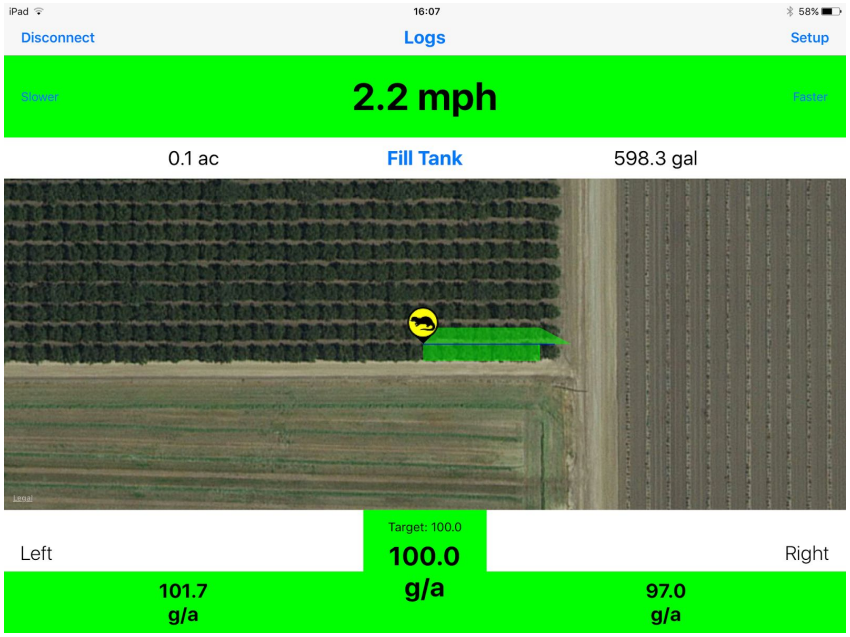

Figure 30: AgOtter Main Run Screen

C) A list of stored logs will come up. Select the logs to download.
D) The selected logs will be downloaded and then emailed once the iPad is connected to the Internet.

10.2. Downloading Log Files from AgOtter Controller (WiFi)

For AgOtter controllers with WiFi enabled, these steps should be followed to retrieve log files:

A) After powering up the AgOtter, on your iOS device go to Settings -> Wi-Fi

B) Choose the Wi-Fi network that matches the serial number of the AgOtter controller. (in this example, AgOtter 108) Once you're connected, a check mark will appear next to the Wi-Fi network. (please note that you will not have internet connectivity while connected to the AgOtter Wi-Fi)

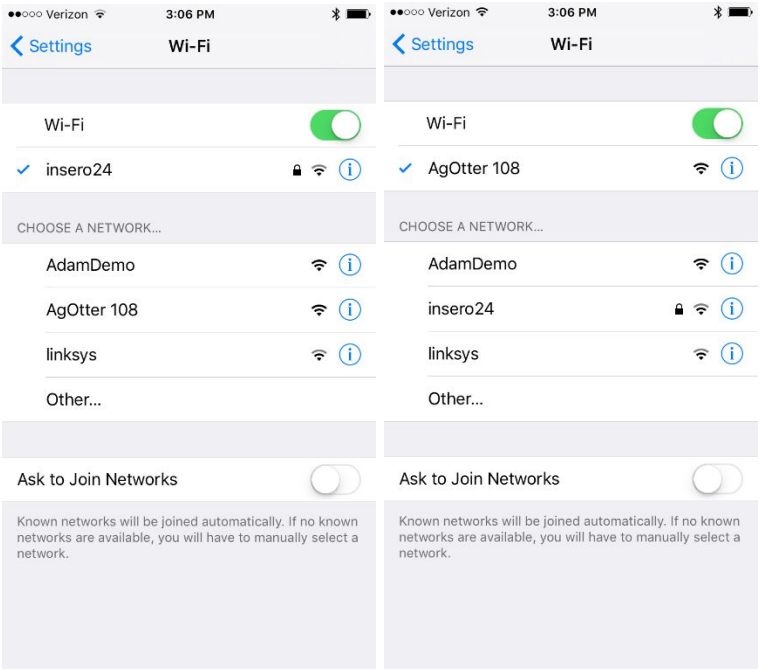

C) Open the AgOtter app and connect to the AgOtter controller. Once connected, the home screen will show a WiFi symbol. If it connects correctly it should be highlighted green.

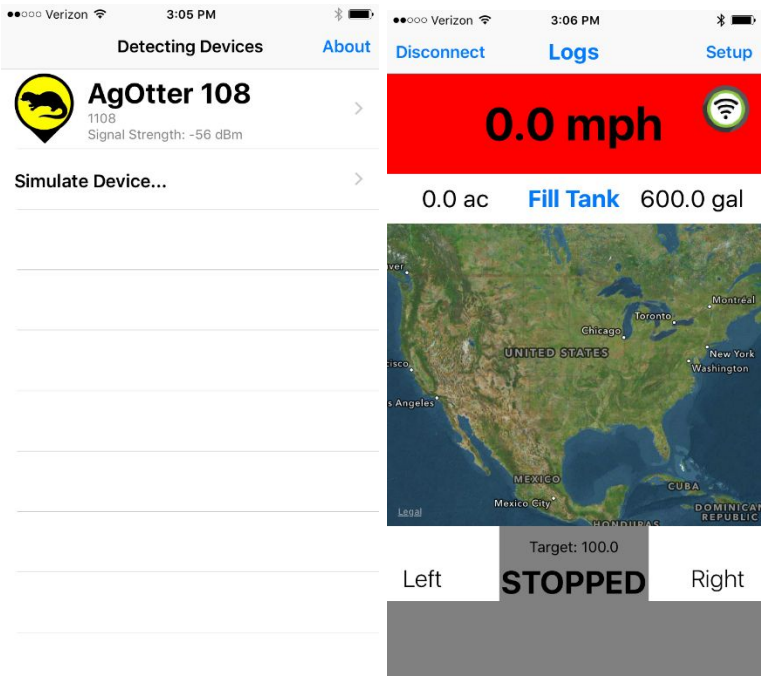

If the icon has a red line through it as shown  one of four things may be the cause:

- You did not connect to the AgOtter Wi-Fi in Settings -> Wi-Fi
- You connected to the Wi-Fi of a different AgOtter
- You are out of range of the AgOtter
- Your iOS may have automatically switched back to your internet router

Note: AgOtter app currently only checks for Wi-Fi signal when first loading the map screen. For now, try pressing 'Disconnect' from AgOtter then going back to the map screen again to test connection.

D) In the Logs menu, click on the log file you want to download. (1108_0002.LOG used in this example)

The log file will transfer, and upon finishing if you choose it again it will open the Mail app and attach the log file to an e-mail to send. (Note: you will have to disconnect from the AgOtter Wi-Fi to re-enable internet access to be able to e-mail log files. See: Steps A & B)

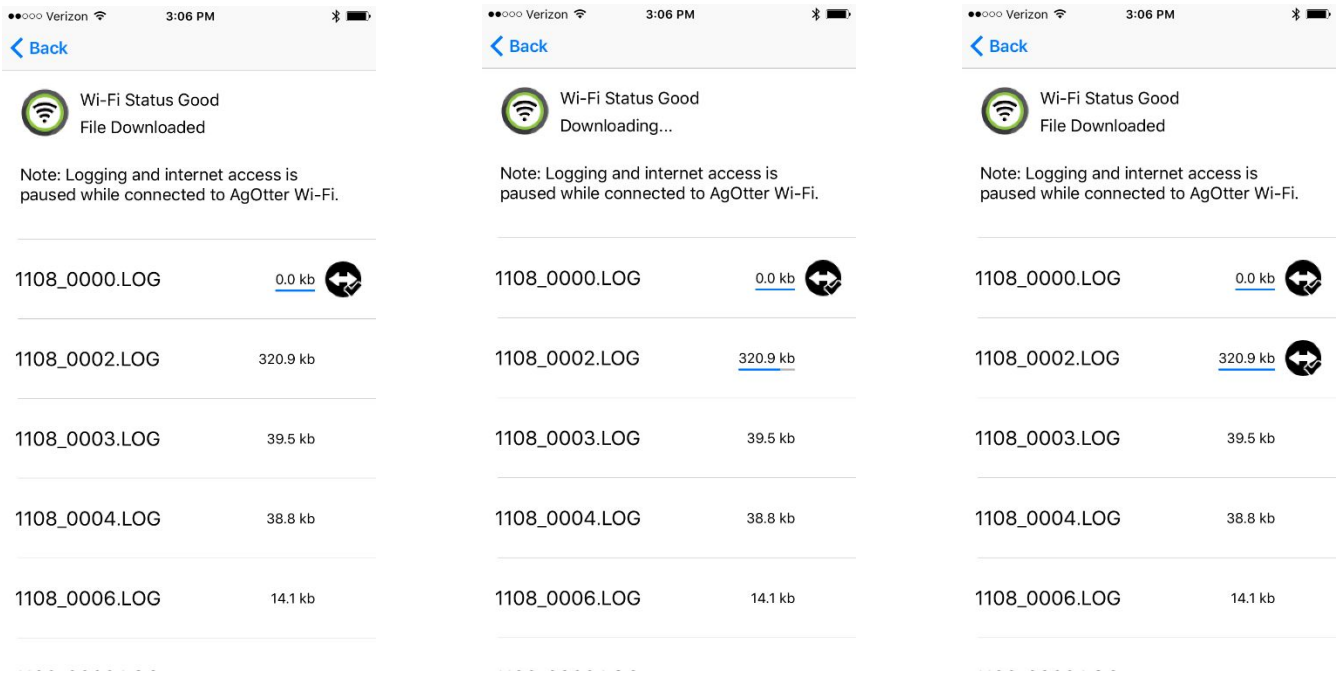

- Files without the Checkmark icon are not on your iOS device. They are only on the AgOtter.
- Files with the Checkmark icon are on both your iOS device and on the AgOtter. These can be e-mailed.
- Note: AgOtter can not log current spray or position data when downloading file, so download when you are not actively spraying.

10.3. Reading / Viewing Log Files

NOTE: To view data from the Log files request a copy of AgOtter's Ag Hippo Windows Desktop Software.

11. Miscellaneous Install Photos

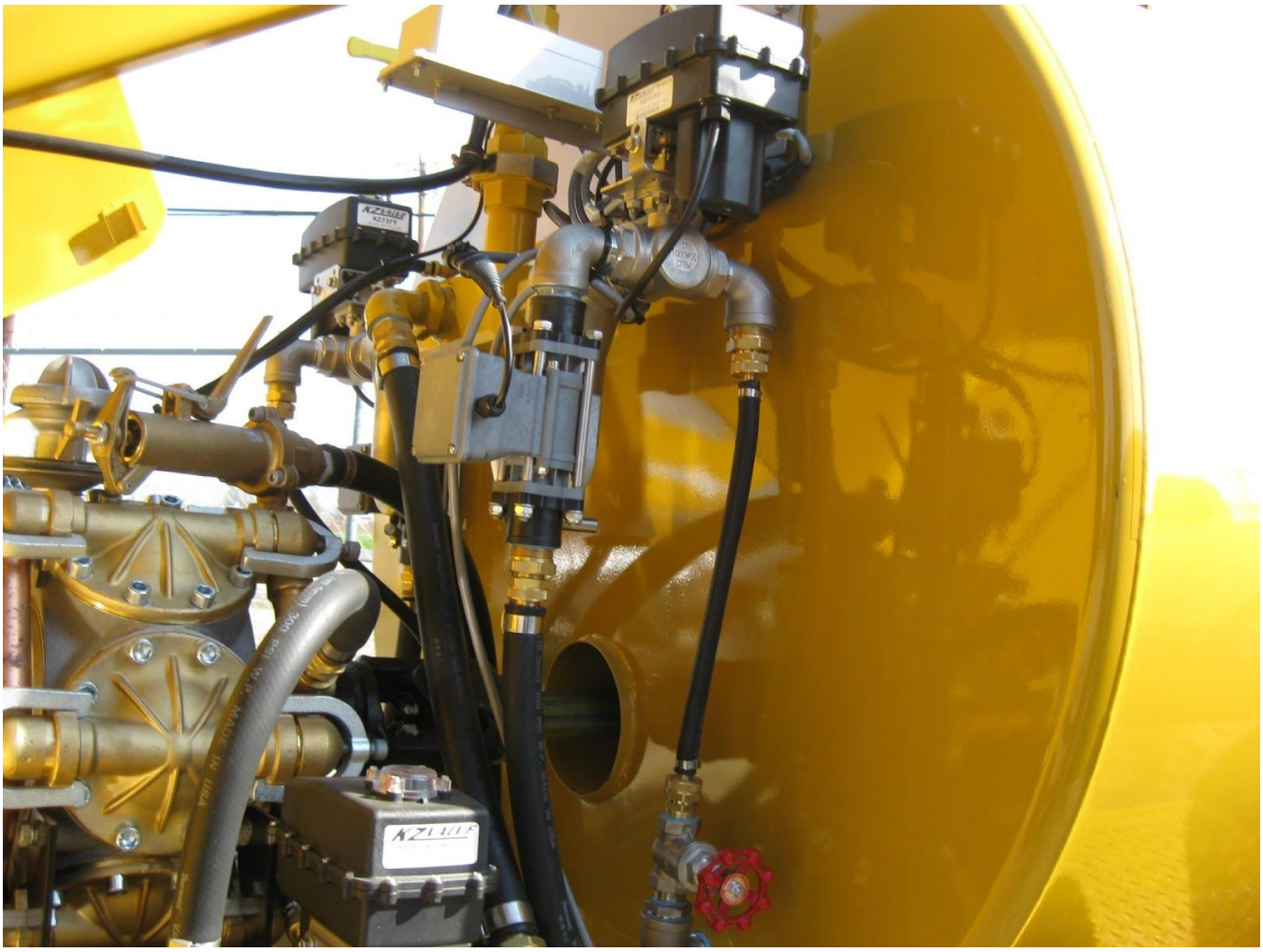

Figure 31: AgOtter install on AirOFan Sprayer
AgOtter Controller, 2 Flow Meters, 1 Control Valve and 2 On/Off Valves